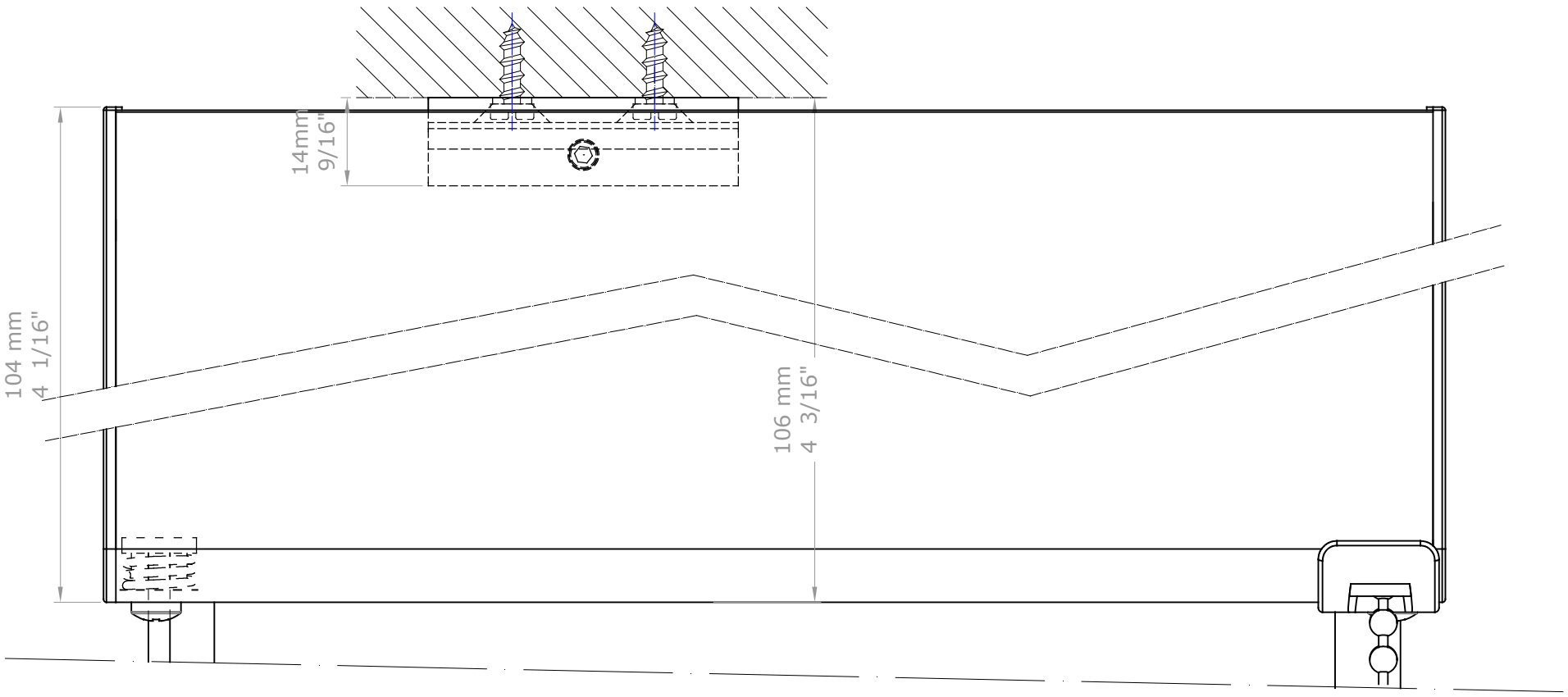

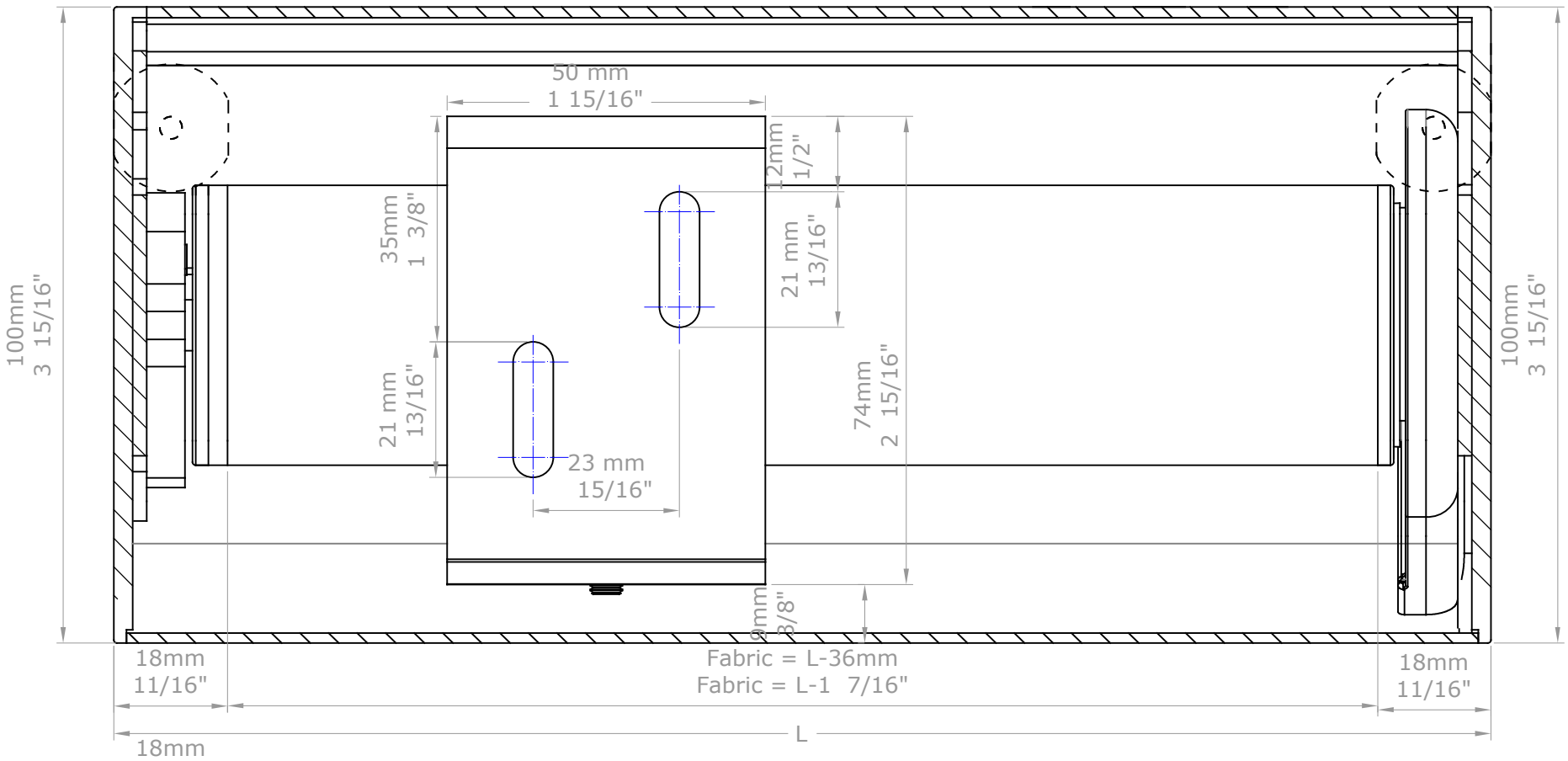

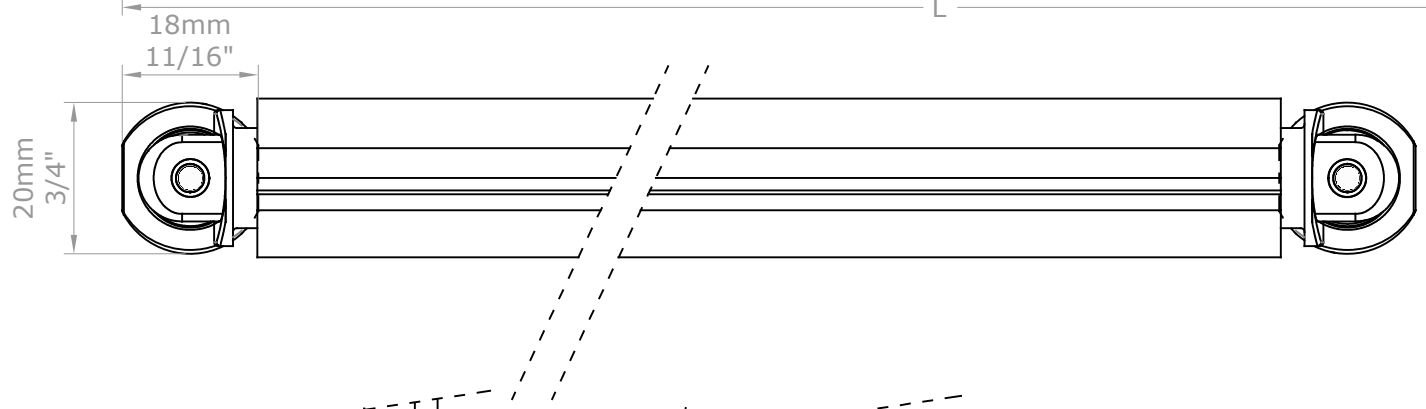

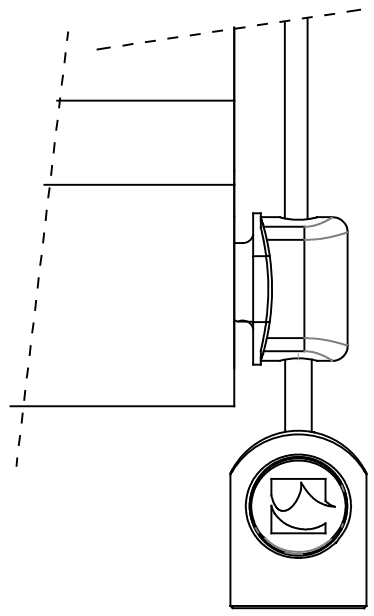

Detail 1:1 bottom rail
round hembar 1 1/8" (Ø30mm)
cable guided

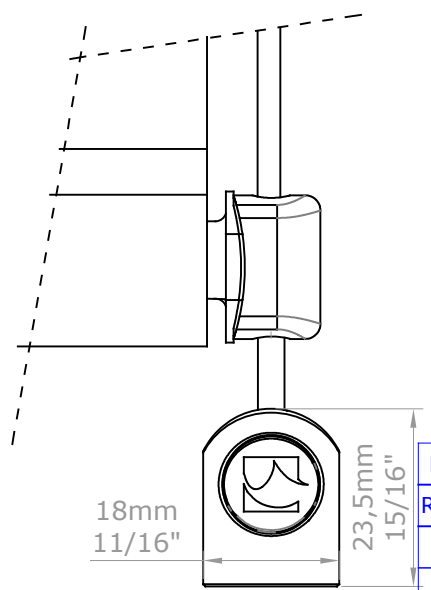

Detail 1:1 bottom rail
round hembar 3/4" (Ø20mm)
cable guided

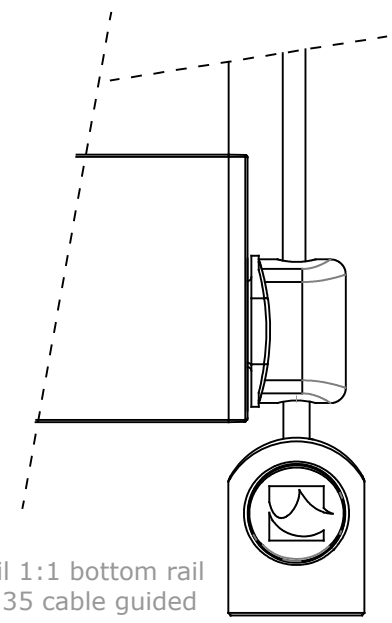

Detail 1:1 bottom rail
Slim 35 cable guided

D. REVIS.		BANDALUX	
REVISION	1 2 3 4 5 6 7 8 9		
DATE	08-03-2018	PLANE Nº	
DESIGN	Antonio F.	FORMAT	A-3
SCALE 1/1	Rolling blind in Box B-Box 4". Chain. Cable Ø1/8" (Ø3.5 mm) guided Instalation: ceiling / floor Mechanism: VTX20 Bottom rail: Round hembar 3/4" (Ø20mm) Tube 1 3/4" (Ø44mm)		